Explorer® *Pro*
Voyager® *Pro*
Analytical and Precision Electronic Balances

Explorer® Pro
Voyager® Pro
Analytical and Precision Electronic Balances

Ohaus Explorer® *Pro* and Voyager® *Pro* balances, the new standard for performance and value in laboratory balances!

The Ohaus Explorer *Pro* and Voyager Pro balances were designed for simplicity and include the industry's easiest user interface for effortless setup and operation; no training is required.

Explorer *Pro* offers all the features and durability found in high-end laboratory balances, while Voyager® *Pro's* Advanced Applications simplify even the most complex laboratory measurements. Plus both balances come with traditional Ohaus quality and support for years of trouble free use!

Standard features include:

- Brilliant backlit high resolution dot matrix display with simple navigation windows and menus to guide you through balance functions
- Five operating languages— English, Spanish, French, German, Italian
- AutoCal™ Automatic Internal Calibration system (standard on Voyager *Pro*, optional on Explorer *Pro*)
- User selectable GLP/GMP outputs via RS232 to meet traceability requirements
- EC Type Approved models available
- Weigh-below hook for below-balance weighing applications
- Protective in-use cover and security bracket

For absolute reliability and precision, simplicity in function and operation, exceptional value, and unsurpassed Ohaus support, Explorer Pro and Voyager Pro are the balances of choice

Explorer® Pro and Voyager® Pro Balances

Analytical Models

Ohaus Explorer *P ro* and Voyager *P ro* feature 4 analytical models with capacities up to 210g and 0.1mg readability for maximum accuracy. The draughtshield design and contoured fit provide optimum draught protection for superior balance stability and re p roducibility in challenging environments.

Precision Toploading Models

With 12 precision toploader models and capacities up to 8100g and readabilities to 0.1g, Explorer *P ro* and Voyager *Pro* feature exceptional accuracy. Their rugged design and versatility make these balances ideal for applications in pharmaceutical, chemical, research and quality control and University research.

Explorer *Pro* High Capacity Models

The Explorer *P ro* Series features 3 high capacity precision toploader models with capacities up to 32,000g and readabilities to 0.1g. The extra large 28 x 35.6 cm platform is ideal for laboratory and industrial applications in concrete/asphalt production, agriculture and quality control. Explorer High Capacity includes Check and Differential Weighing, Statistical Functions, Formulation, and Filling.

Application Modes

Percentage Weighing
Percentage weighing allows you to place a reference load on the pan, and check other samples as a percentage of the reference load. Each new sample will be a "percentage" of the original reference, the display shows the variance in – or + percent of the reference.

Weighing
Basic weighing with primary and secondary weighing units, time, date and capacity bar.

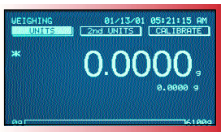

Gross/Net/Tare
G/N/T is an application mode commonly used when you need to identify the individual weights of the container, the material and both together.

Dynamic Weighing

Dynamic weighing allows the user to weigh unstable matter that may be moving. This mode can be set to manual, semi-automatic, or automatic.

Parts Counting
Enhanced parts counting features include auto sample optimization, user definable sample size and manual entry using scroll keys. The "Parts Counting Check" feature allows for quickly checking a sample of pieces against a preset criteria, with results displayed as the number of pieces. The " P a rts Counting Fill" feature allows for quickly checking a sample of pieces against an established criteria, with results displayed as a percentage of the preset target.

Checkweighing
Checkweighing is used when items need to be checked against a present target, using over/under parameters. The display automatically shows the difference in percent and weight.

Analytical and Precision Balances

Ohaus Explorer *Pro* and Voyager *Pro* balances were designed with the user in mind. They feature an ultra-simple and innovative user interface with on screen text prompts and scroll down menus. One-step operation guides you through the application modes with a single button press. The state of the art high-resolution display is easy to view and displays only the information you want to see. Explorer *Pro* and Voyager *Pro* balances were designed with a spill channel and include an in-use cover. These balances are manufactured to ISO 9001 quality assurance specifications, for traditional Ohaus quality you've come to expect.

Key Features

Superior Draughtshield
A large 3-door draughtshield is standard on all Analytical and Precision balances with a 0.1/1mg readability. The draughtshield design provides optimum draught protection from wind currents for superior balance stability and reproducibility even in challenging environments. The large chamber can accommodate larger vessels and the removable side doors make it easy to clean.

Automatic Calibration
The AutoCal™ calibration feature automatically calibrates the balance when it senses a temperature change sufficient enough to affect weighing accuracy. This assures accuracy while saving operational time. This feature is standard on Voyager Pro models and available as an option on Explorer Pro.

Multi-Language Text
Explorer Pro and Voyager Pro balances offer 5 language operational display text. Standard language text includes: English, Spanish, French, Italian and German.

Large Brilliant Display
A high-resolution dot matrix display with backlight provides enhanced viewing in any environment. The large display screen features user definable text fields to illustrate only the information you want! The display also shows secondary units, time and date. Text prompts simplify menu navigation and balance setup. Display features adjustable contrast and brightness controls.

Communications Port with GLP/GMP Data Output
The standard RS232 communication port offers connectivity and it's GLP/GMP data output capability prints time, date, balance, project, user ID, calibration information and weighing information. Simply connect your Voyager Pro to the optional Ohaus SF42 accessory printer and full trace-ability of weight readings is achieved without the need for sophisticated, expensive peripherals.

Levelling Feet for Quick Set-Up
Standard on all models, the front level bubble assures accurate operation.

Innovative Software
Simple to use and easy to follow, with no training or manual required! The 3 application-specific soft-keys allow direct access to features such as calibration, units, sample size and reference information at a touch of a button.

Protective Cover
Explorer Pro and Voyager Pro balances feature a durable in-use cover as standard equipment. The replaceable cover protects the display from harsh environments or spills that can ruin the balance.

Explorer *Pro* and Voyager *Pro:* Weighing Units for Every Application.

For total versatility, Explorer Pro offers 7 application modes and 16 standard weighing units for almost any type of mass measurement application. Voyager Pro adds 6 additional application modes!

Weighing Modes Include

- Milligrams
- Grams
- Kilograms*
- Pounds*
- Ounces
- Carats
- Troy Ounces
- Newtons
- Grains
- Mommes
- Taels (3)
- Ticals
- Pennyweights
- User Programmable Custom Unit

**not available on Analytical units*

Explorer Pro Application Modes:

- Weighing
- Parts Counting
- Dynamic Weighing
- Percentage Weighing
- Checkweighing
- Filling
- Gross/Net/Tare Weighing

Voyager Pro Adds These Additional Application Modes:

- Differential Weighing
- Formulation
- Statistics
- Density Determination
- SQC
- Pipette Calibration

Explorer® Pro and Voyager® Pro Balances

General Specifications

Weighing Units	gram, milligram, ounce, ounce troy, carat, pennyweight, Hong Kong Tael, Singapore Tael, Taiwan Tael, mommes, grain, tical, Newton, custom
Application Modes - Explorer *Pro*	Weighing, Parts Counting, Dynamic Weighing, Checkweighing, Percent Weighing, Filling, Gross/Net/Tare Weighing
Application Modes - Voyager *Pro*	Statistics, Formulation, Differential Weighing, SQC, Density Determination, Pipette Calibration, Parts Counting, Dynamic Weighing, Checkweighing, Percent Weighing, Filling, Gross-Net-Tare Weighing
Features	Applications Library, RS232 Port, Auxiliary Display Port, GLP Protocol, Selectable Operating Language, Selectable Displayed Information Settings, Selectable Environmental Settings, Selectable Auto-Print Settings, Integral Weigh Below Hook, Contrast & Brightness Control, Protective In-Use Cover
Tare range	Full Capacity by Subtraction
Operating Temperature Range	10° to 30° C without AutoCal™ 10° to 40°C with AutoCal™
Power Requirements	100-120 V AC, 220-240 V AC, 50/60 Hz
Calibration	Internal / External
Display Type	LCD Dot Matrix w/Backlight
Display Size (cm)	240 x 128 pixels

Precision Balances

Capacity (g)	**210**	**410**	**610**	**100 / 410**	**610**	**2100**	**4100**	**6100**	**1000 / 4100**	**4100**	**6100**	**8100**
Readability (g)	0.001			0.001/0.01	0.01				0.01/0.1	0.1		
Repeatability (Std. dev.) (g)	0.0005		0.0015	0.0005/0.005	0.005			0.01	0.01/0.05	0.05		
Linearity (g)	± 0.002			± 0.002/0.005	± 0.02			± 0.04	± 0.02/0.05	± 0.1		
Stabilization Time (seconds)	3											
Pan Size (cm)	12 dia.				17.2 x 17.2 with Windshield					20.3 x 20.3 §		
Dimensions WxHxD (cm)	21 x 35 x 35				21 x 10.3 x 35							
Net Weight (kg)	6				5							
Explorer *Pro* w/o AutoCal™	**EP213**	**EP413**	**EP613**	**EP413D***	**EP612**	**EP2102**	**EP4102**	**EP6102**	**EP4102D***	**EP4101**	**EP6101**	**EP8101**
Explorer *Pro* w/ AutoCal™	**EP213C**	**EP413C**	**EP613C**	**EP413DC***	**EP612C**	**EP2102C**	**EP4102C**	**EP6102C**	**EP4102DC***	**EP4101C§**	**EP6101C§**	**EP8101C§**
Voyager *Pro*	**VP213C**	**VP413C**	**VP613C**	**VP413DC***	**VP612C**	**VP2102C**	**VP4102C**	**VP6102C**	**VP4102DC***	**VP4101C**	**VP6101C**	**VP8101C**

* *Moveable FineRange™*

§ *Balances with AutoCal™ are equipped with a 17.2 cm x 17. 2 cm pan and windshield.*

Analytical Balances

Capacity (g)	**62**	**110**	**210**	**100 / 210**
Readability	0.1 (mg)			0.1 / 1 (mg)
Repeatability (Std. dev.)	0.1 (mg)			0.1 / 0.5 (mg)
Linearity	± 0.2 (mg)			± 0.2 / 0.5 (mg)
Stabilization Time (s)	4			
Pan size (cm)	9			
Dimensions WxHxD (cm)	21 x 35 x 35			
Net Weight (kg)	6			
Explorer *Pro* w/o AutoCal™	**EP64**	**EP114**	**EP214**	**EP214D***
Explorer *Pro* w/ AutoCal™	**EP64C**	**EP114C**	**EP214C**	**EP214DC***
Voyager *Pro*	**VP64C**	**VP114C**	**VP214C**	**VP214DC***

* *Moveable FineRange™*

§ *Balances with AutoCal™ are equipped with a 17.2 cm x 17. 2 cm pan and windshield*

AutoCal models are available as EC Type Approved versions (exceptions: EP613C and VP613C)

High Capacity Balances

12000	**22000**	**32000**
0.1 (g)		
0.1 (g)		
± 0.4 (g)		
4		
28 x 35.6		
36 x 14 x 44.5		
12.3		
EP12001†	**EP22001†**	**EP32001†**
EP12001C†	**EP22001C†**	**EP32001C†**
n/a	**n/a**	**n/a**

Voyager® Pro Applications

Statistical Quality Control (SQC)

The SQC feature is extremely useful when it is desired to monitor and control a process to eliminate under and over filling.

Provisions are made in the balance to accommodate the weight of various packaging proceses. During operation, parameters of the packaged product are set into the balance including packaging weight, acceptable weight limits and non-acceptable weight limits of the product.

These weight limits are identified as +TI, +T2, NOMINAL and -TI, -T2. As samples are weighed and stored in the balance, a trend analysis is developed and displayed on the balance. Each batch of samples is shown on the display which indicates the maximum/minimum standard deviation and mean values for each batch. An on going examination of the relative deviation of the samples can be viewed and is stored, allowing you to effectively monitor the filling process operation.

Statistics

Statistics are used when it is desired to compare a number of samples and examine the relative deviation of the samples along with other statistical data. A minimum of three samples are required in this program. Statistics options include: number of samples, maximum, minimum, difference, sum, mean, standard deviation, relative deviation, auto sample, and auto print. Weighing, Dynamic Weighing, Checkweighing and Filling application modes can also be linked to the Statistics mode to provide statistical data.

Differential Weighing

Differential weighing stores tare and weight values so samples can be dried or processed and the difference in weight be calculated. Up to 80 samples can be stored. The balance has the capability to work with one or two different containers or no container at all.

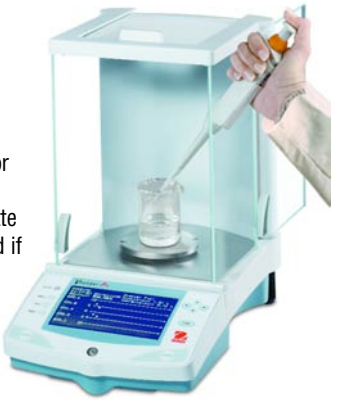

Pipette Calibration

Pipette calibration checks the accuracy and precision values of pipettes by weight analysis. An analytical balance is recommended for maximum accuracy. The balance is capable of recording data from 3 to 30 samples of each pipette tested. The density table for water is included and if liquid is used for pipette calibration, Voyager *Pro* will accept the alternate liquid's density in g/cc at current room temperature.

Density

An accessory density determination kit is designed to be used with Ohaus Voyager *Pro* balances. A built-in reference density table for water at temperatures between 10°C and 30°C is included in the balance software.

Formulation

Formulations can be named and have from 2 to 10 components specified. Once named, they may be recalled and used at any time. Each component of a given formulation can be specified as to its weight or percentage. Each element of a formulation is shown on a dual bar graph as a percentage and displays the desired weight. Thus, each component may be placed on the pan until 100% is indicated.

Explorer® Pro and Voyager® Pro Balances

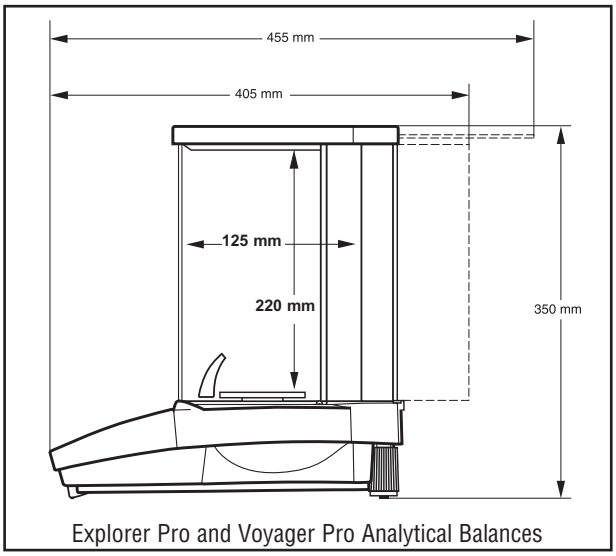

Explorer Pro and Voyager Pro Analytical Balances

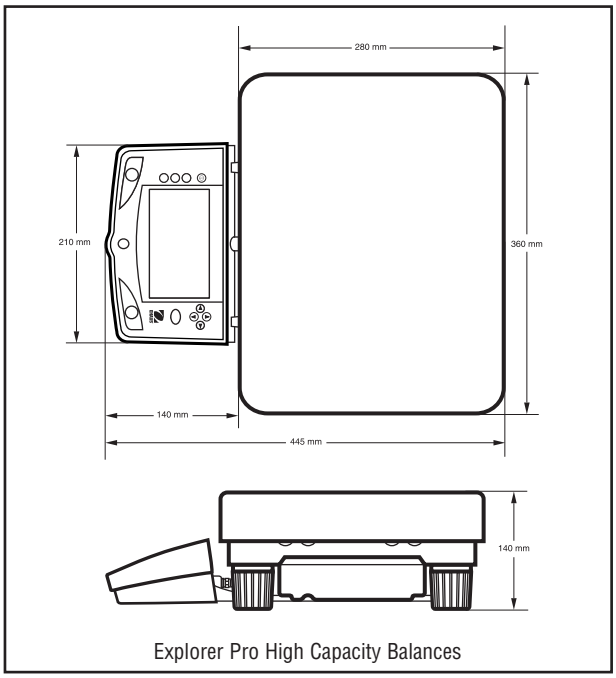

Explorer Pro High Capacity Balances

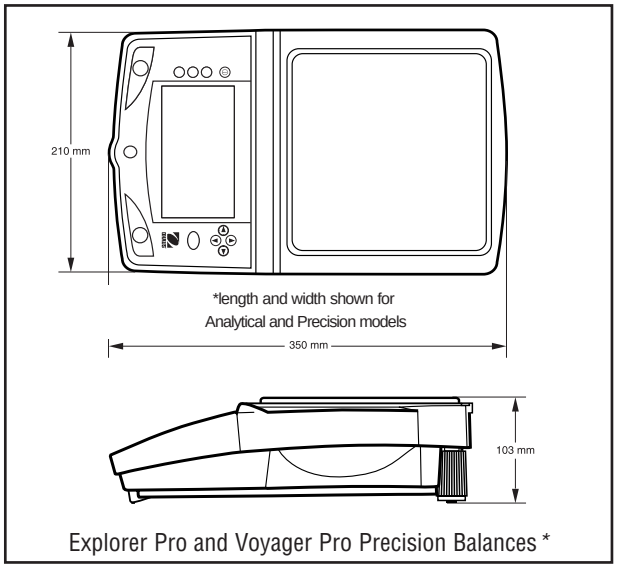

Explorer Pro and Voyager Pro Precision Balances *

Additional Features
RS232 port for easy communication with computer or printer, GLP compliant with user selectable outputs, protective in-use cover, security bracket

Optional Accessories
Explorer *Pro* and Voyager *Pro balances* offer a complete line of accessories and masses to expand your mass measurement capabilities, including: Density determination kit (for 0.1mg and 1mg balances), model SF42 42-column impact printer, security devices, RS232 cables, calibration masses. Contact your Ohaus dealer for our complete offering.

Industry Leading Quality and Support
All Ohaus Explorer® *Pro* Voyager® *Pro* balances are manufactured under an ISO 9001:2000 Registered Quality Management System. Our rugged construction and stringent quality control have been hallmarks of all Ohaus products for nearly a century.

Ohaus UK Ltd.
64 Boston Road
Beaumont Leys
Leicester LE4 1AW
Tel.: 0116 234 5075
Fax: 0116 235 9256
e-mail: uksales@ohaus.com

Ohaus Europe GmbH
Im Langacher
CH-8606 Greifensee
Switzerland
Tel.: +41-44-944 33 66
Fax: +41-44-944 32 30
e-mail: EuropeSales@Ohaus.com

Ohaus Corporation
*19 Chapin Road
Pine Brook, NJ 07058 USA
Tel.: +1-973-377-9000
Fax: +1-973-593-0359
e-mail: OhausHQ@Ohaus.com

With offices in Mexico, Switzerland, England, Germany, France, Spain, Italy, Poland, Russia, Japan, Korea and China

***ISO 9001**
Registered Quality Management System

www.ohaus.com

80774197 07.2005 © Copyright Ohaus Corporation

OHAUS®